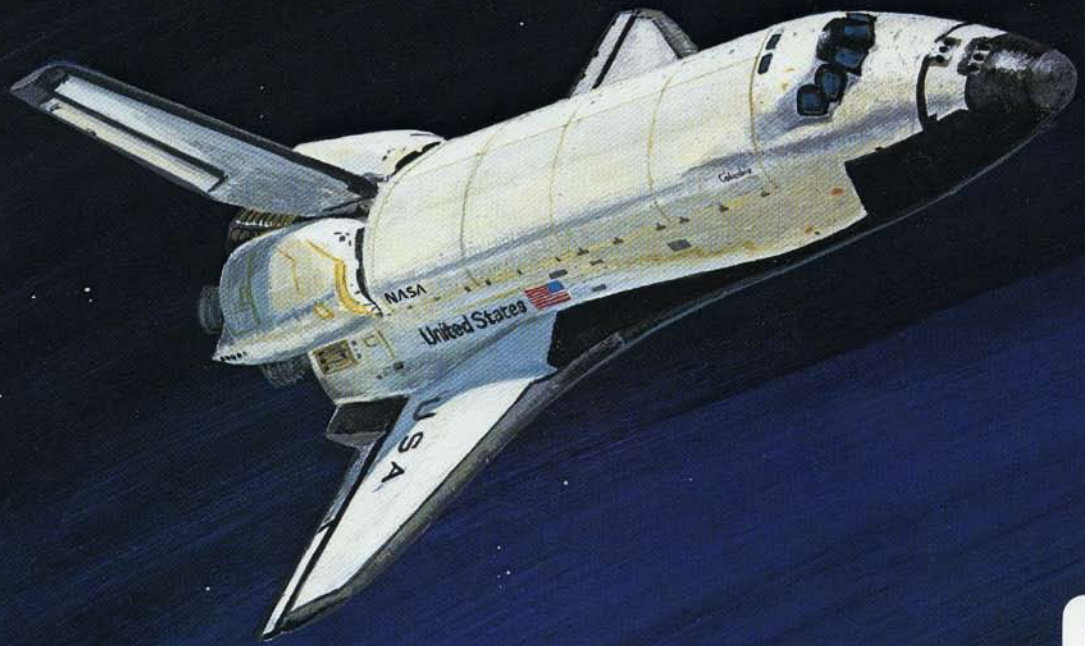

NASA

ASTRONAUT'S PHOTOGRAPHY MANUAL

HASSELBLAD

Foreword

This Astronaut's Photography Manual has been prepared by Hasselblad in close cooperation with the Training and Man-Machine Divisions at the Johnson Space Center of the National Aeronautics and Space Administration. As a guidebook for the NASA Photography Training Program, it not only describes the operation of the Hasselblad 500 EL/M cameras used on the U. S. Space Shuttle but is also a concise manual on photography to assist astronauts in creating the best possible space photographs.

Hasselblad cameras have performed with precision on every manned space flight since 1962 and undoubtedly future missions will continue to yield those awe-inspiring and beautiful images from space - a priceless pictorial legacy for future generations.

A Hasselblad lunar data surface camera was mounted into the Shuttle Pallet Satellite and operated remotely by the astronauts by means of a radio signal to record images of the Challenger in flight.

Table of Contents

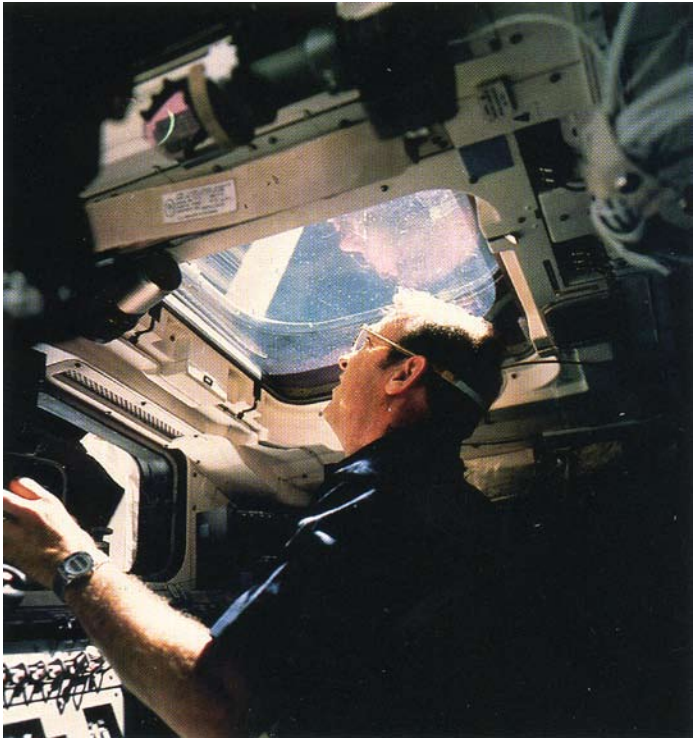

Sunlight coming through the windows can make beautiful "available light" shots. The slide is perfectly exposed for the most important part of the scene - the astronauts facial flesh tones.

Camera Controls 2
Film Magazine Controls 2
Viewfinder Controls 3
The EL/M Power Supply 4
Releasing the Camera 4
Remote Operation 5
Camera Steadiness 5
Operating Modes 6
Film Magazines 6, 7
Film Magazine with Databack 8
Permanently Attached Databack 8
Databack with Removable Module 8
Changing Lenses 9
Lenses 10
Lens Controls 10, 11
Viewing 12
Diopter Adjustment 12
Focusing 13
Focusing Suggestions 14
Depth of Field 14, 15, 16
Depth of Field at Different Apertures 15
Depth of Field with Different Lenses 16
Focusing for Depth of Field 17, 18
Use of Lenses 19, 20, 21
Lens Aperture 22
Shutter Speed 23
Setting Aperture & Shutter Speed 23
Changing Aperture & Shutter Speed 24
Exposure 24
Exposure from Charts 24
The Exposure Meter 25
ASA/ Shutter Speed Setting 26
Viewfinder on Meter 26
Operating Meter 26, 27
Determining Lens Settings with Exposure Meter 27,28
Exposing for Sun or Shade 29
Exposing for Slides 29
Exposing for Negative Film 29
High Contrast Scenes 29
Bracketing Exposure 29
Exposure Techniques 30
Composition 31, 32, 33
Obtaining the Most Effective Images 34, 35, 36

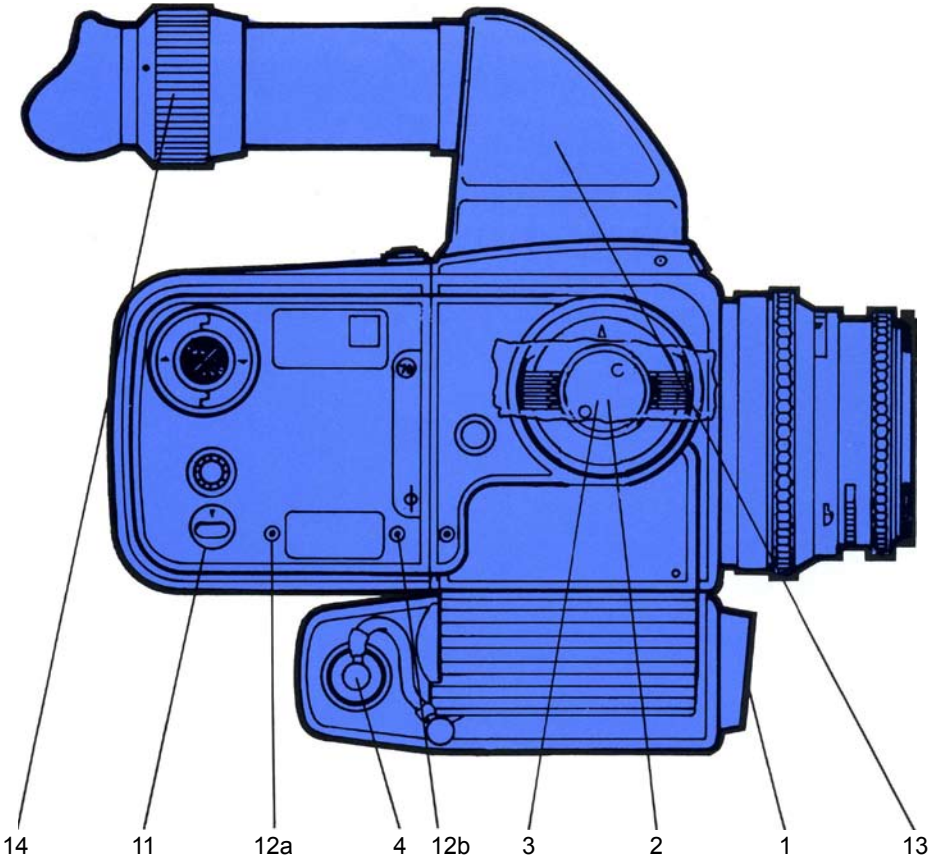

Camera Controls:

1) Operate Push button
2) Mode Selector (taped)
3) Lens Cocking Tool (Under tape)
4) Remote Connector
5) Battery Compartment
6) Battery Compartment Lock
7) Lens Release Button

Film Magazine Controls:

8) Magazine Release Button
9) Magazine Insert Lock (Taped)
10) Darkslide
11) Frame Counter
12a) End of Film Indicator
12b) Film Advance Indicator

Viewfinder Controls:

13) Prism Viewfinder
14) Diopter Correction Eyepiece
15) Lock for Correction Eyepiece
16) Rubber Eyecup

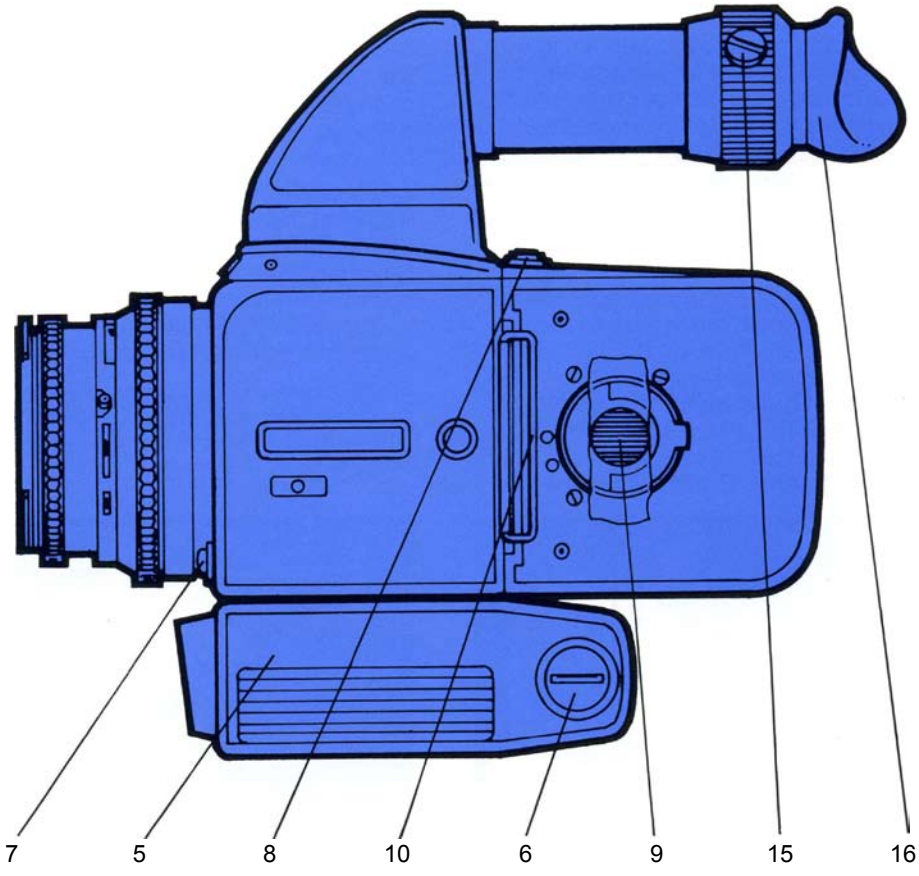

The electric film advance is powered by two 6V rechargeable nickel cadmium batteries located in the battery compartment. Two fully charged batteries provide power for approximately 2000 exposures and changing the batteries should not be necessary. A slowing down of the winding cycle, however, indicates low battery voltage and that both batteries need to be changed.

The battery compartment is opened by turning the slotted compartment lock (6) counter clockwise to the vertical position using the lens cocking tool (3). Remove the compartment cover (Fig. 1). Always remove both batteries and insert one spare battery in either compartment. Batteries (A) are inserted with the (+) end first (Fig. 2). Properly inserted, the batteries rest on a spring and can be pushed up &down. When inserted the wrong way, the cover cannot be closed easily and may be permanently bent. Do not force. Check position of batteries. Cover is re-attached by placing the hooks at the front of the cover into the openings (D) in the camera then pressing the rear firmly towards the compartment while turning the slotted lock (6) clockwise to the horizontal (locked) position.

NOTE: Camera operates only if a fuse in good condition is in the fuse receptacle. The fuse (C) can be replaced and inserted in (B) either way.

The image is recorded on the film by pressing the operate push button. The shutter is re-cocked, and the film advanced to the next frame, when removing the finger from the button. A second exposure can be made as soon as the winding cycle is completed. If the camera does not operate when the release is depressed:

1. Darkslide may be inserted in film magazine. Remove it.
2. There may be no film left in magazine. Check film load signal (12a) if red, change magazine.
3. The fuse is dead. Replace.
4. The batteries may have no charge left. Replace.

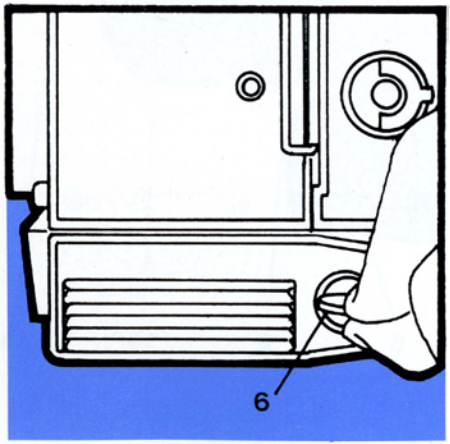

FIGURE 1

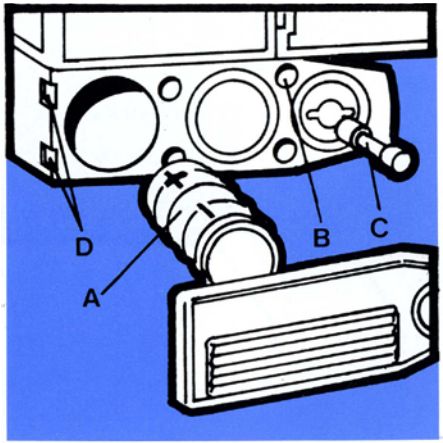

FIGURE 2

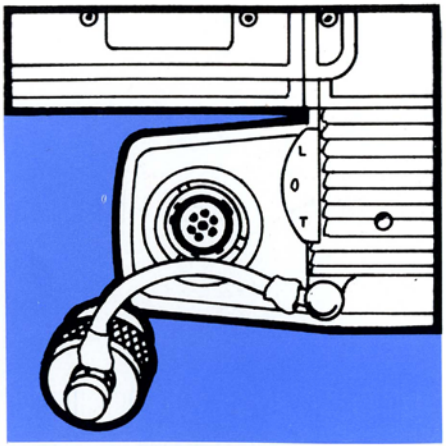

FIGURE 3

Camera can also be released with remote cable, Remove socket cover (Fig. 3) by turning it counter clockwise and attach remote release cable to remote connector 4. The camera operation is determined by the position of the mode selector (page 6) one picture in position 0 - or sequences in position A.

The camera must be perfectly steady when the exposure is made. Camera motion while the film is being exposed can result in unsharp pictures. Reduce the danger of camera movement by:

1. Holding camera firmly with both hands, one hand on the bottom, the other on top (Fig. 4&5). 2. Pressing both elbows into your body for additional support.
3. Pressing rubber eyepiece of the viewfinder against your viewing eye to form a firm contact between the forehead and finder (Fig. 6).
4. Holding Breath.
5. Pressing the operate push button slowly and gently so you are hardly aware when the exposure is made and keeping it depressed until the exposure is completed. Don't jerk the release or depress it rapidly.

NOTE: Perfect camera steadiness is important with all lenses - but more so with the 250mm Sonnar. The long focal length magnifies camera shake.

FIGURE 4

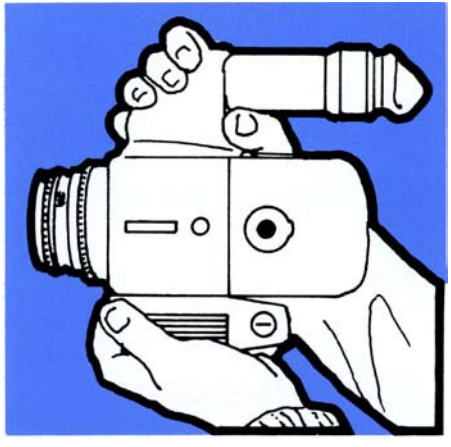

FIGURE 5

FIGURE 6

1) The mode selector is set at 0 at launch and taped over (Fig. 7). Do not remove the tape and change the setting except for automatic sequence operation.
2) For automatic sequence operation (1 picture per second) remove tape, change selector to A (Fig.8). When the release is depressed, the camera takes pictures at regular intervals of 1frame/second as long as the release is kept depressed - and as long as there is film in the camera. When sequence is completed, change dial back to 0 and re-tape.

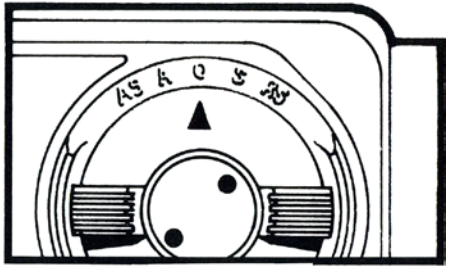

FIGURE 7

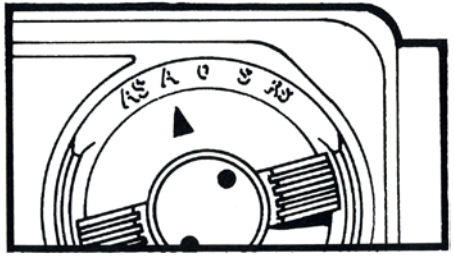

FIGURE 8

To attach a film magazine to the camera body, hook the magazine onto the two lower support catches (E) (Fig. 9), swing the top of the magazine firmly and completely against the upper catches (F) and camera body while at the same time sliding the magazine release button (8) to the right (Fig. 10). After the magazine is attached remove darkslide (Fig. 9a).

To remove a magazine, insert darkslide (10) slide magazine release button (8) to the right (Fig.11), lift off magazine (Fig. 12).

NOTES: a) Magazines cannot be attached or removed unless darkslide is inserted. b) Never remove the darkslide from a magazine that is not attached to the camera. It would expose some of the film in the magazine.

OPERATING SIGNALS: (Fig. 13)

The film magazine includes a frame counter (11) which counts up and indicates number of frames exposed. Check once in a while so you do not run out of film in the middle of an important picture taking sequence. There are about 120 frames on a roll of film. There is also an end of film indicator (12a). It turns from white to red when the roll of film is finished and at that moment the camera will stop operating. Film advance indicator (12b) goes from white to red to white to show film is advancing properly.

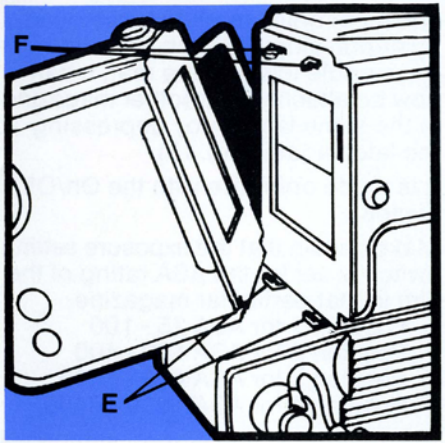

FIGURE 9

FIGURE 10

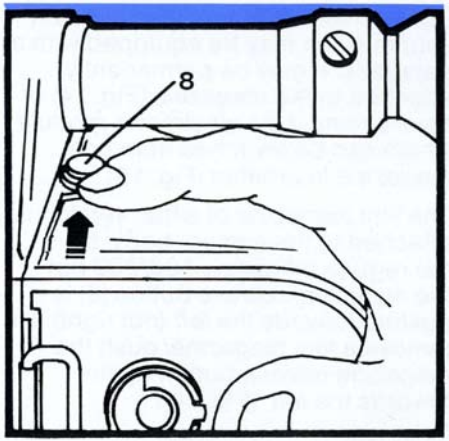

FIGURE 11

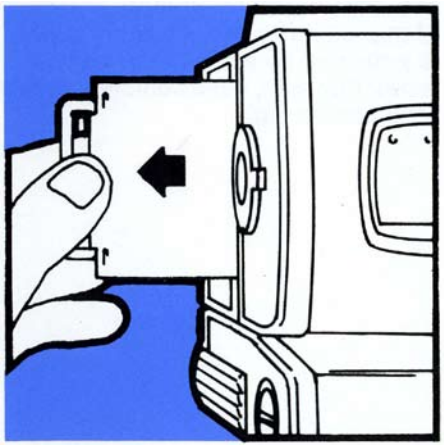

FIGURE 9a

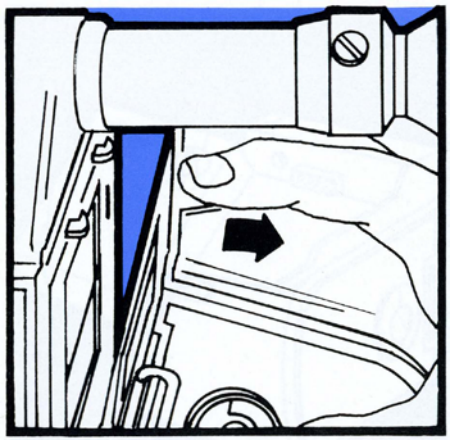

FIGURE 12

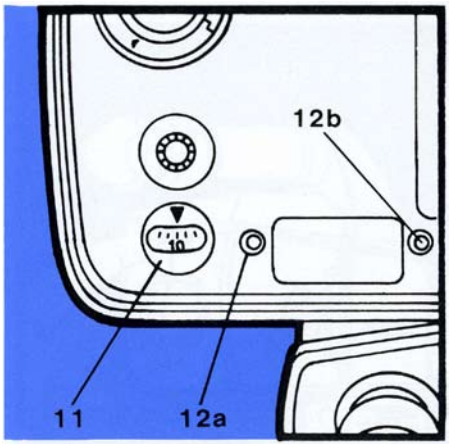

FIGURE 13

Film Magazines with Databacks

Some or all film magazines used on your mission may be equipped with a databack. It may be permanently attached to the magazine (Fig. 14) or have a removable electronics module which can be switched from one magazine to another (Fig. 15).

The film magazine of either version is attached to the camera body, as is the regular magazine 100/200 but the magazine release button (8) is pushed towards the left (not right). To remove a film magazine, push the magazine release button again towards the left (Fig. 14).

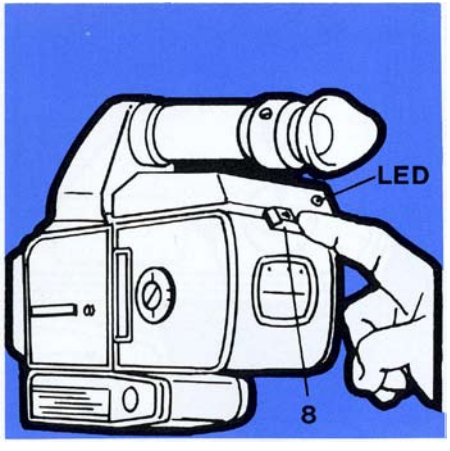

FIGURE 14

Permanently Attached Databack

Proper operation is indicated by a green LED at rear. Check whether it goes on and off after the exposure. This indicates that the data recording has been successful.

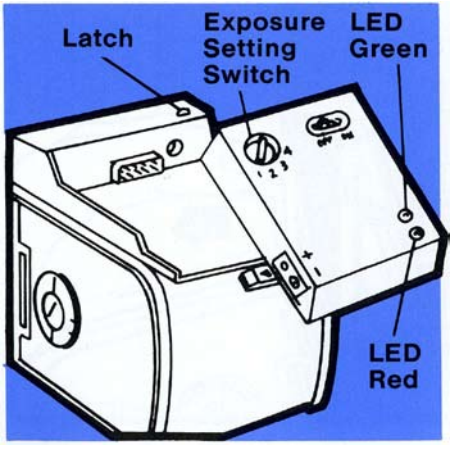

FIGURE 15

Databack with Removable Module

The electronics module is removed by depressing the latch and sliding the module towards the rear. It can now be attached to another magazine in the same fashion by depressing the latch again (Fig. 15). It is made operative with the On/Off Switch. Make certain that the exposure setting switch is set for the ASA rating of the film in that particular magazine.

Position 1 for ASA 25 - 100

Position 2 for ASA 100 - 400

Position 3 for ASA 400 - 1600

Position 4 for ASA 1600 - 6400

Instructions for the correct setting will be supplied.

A green LED lights up momentarily at the end of each shot to indicate a successful data recording.

Malfunctioning or low battery power is indicated by a red LED. The batteries, however, have sufficient power for an entire flight.

To remove a lens, press lens release button (7) and turn lens counterclockwise about 1/10 turn (Fig. 16). To attach a lens, match red marking on lens barrel with red marking on camera body (Fig. 17). Turn lens firmly clockwise until it clicks positively in place (Fig. 18). Do not depress lens release button when attaching a lens.

NOTES:

a) Lenses can be removed only when the shutter is cocked, which is normally the case on the EL/M. The lens could be uncocked only if the camera stops before completing the cycle due to low battery power, or if a fuse is blown. If so change batteries to complete cycle or change fuse.

b) Lenses can be attached only if the camera body is cocked and the shutter in the lens is also cocked (open). (Shaft J) in lens is opposite red dot (L) (Fig. 19). If a shutter should have been closed accidentally while lens was removed from camera insert lens cocking tool (3) located under the taped mode selector (2) in shaft slot (M). Make a full turn clockwise in the direction of the arrow. (Fig. 20)

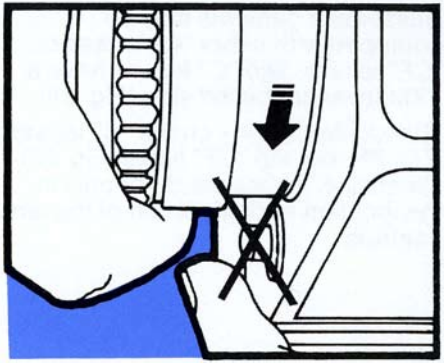

FIGURE 18

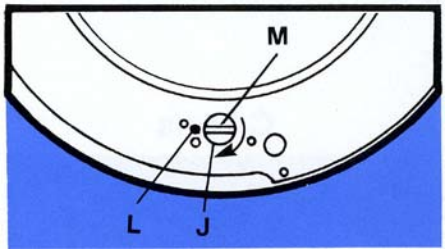

FIGURE 19

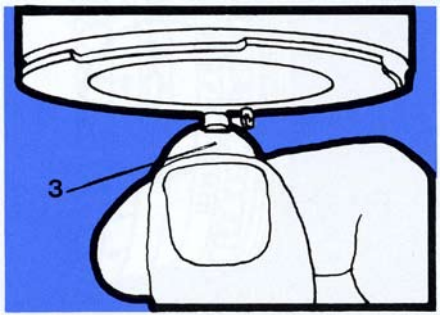

FIGURE 20

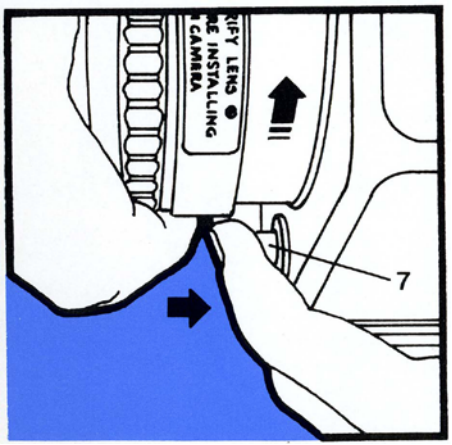

FIGURE 16

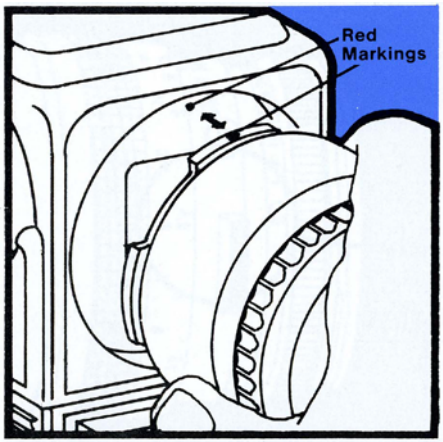

FIGURE 17

Hasselblad cameras may be equipped with either "C" lenses or "CF" lenses. The "c" lenses have a VXM lever on the left side (Fig. 21)

This control is only on the "C" lenses (Fig. 21), not the "CF" types (Fig. 22). Otherwise, the lenses differ only in the location and operation of the lens controls.

17) Focusing Ring with distance engravings
18) Lock for "F" setting ("CF" lens only)
19) Aperture Setting Ring with aperture engravings
20) Shutter Speed Ring with shutter speed engravings
21) Index for distance, aperture &shutter speed
22) EVS Engravings
23) Index for EVS Setting
24) Lever for unlocking aperture & shutter speed (on "c" lenses only)
25) Button for interlocking aperture and shutter speed rings (On "CF" only)
26) Movable depth of field indicators (on "c" lenses only)
27) Engraved depth of field indicators (on "CF" lenses only)
28) Flash Sync Lever, (must be on X or M) (on "c" lenses only)
29) Flash cable connector
30) Manual diaphragm stop down

C Lens

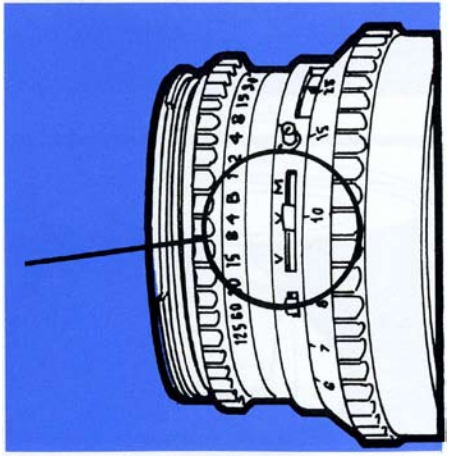

FIGURE 21

CF Lens

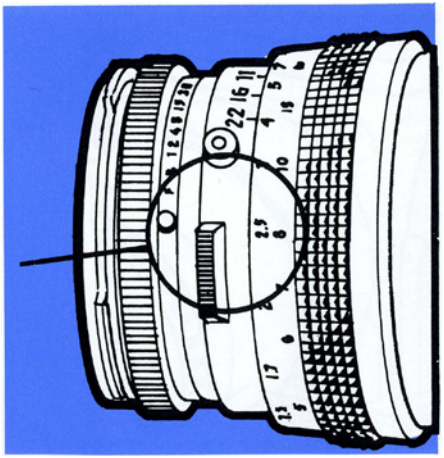

FIGURE 22

C Lenses

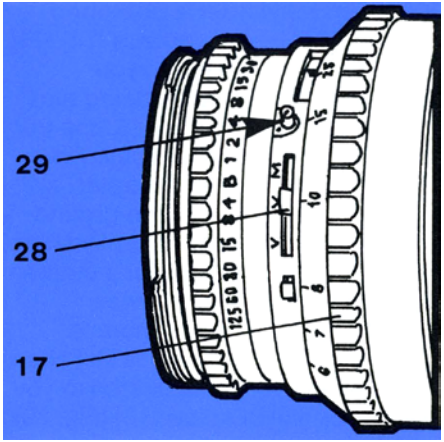

FIGURE 23

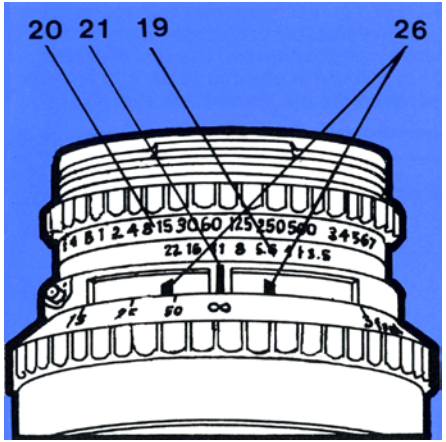

FIGURE 24

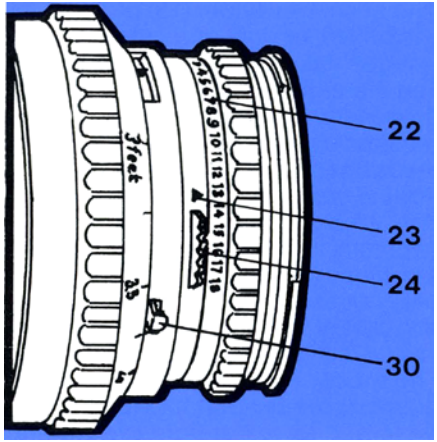

FIGURE 25

CF Lenses

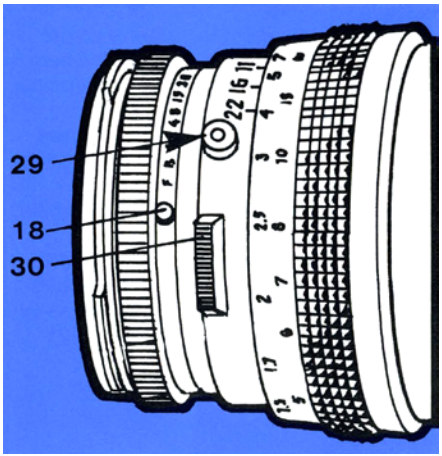

FIGURE 26

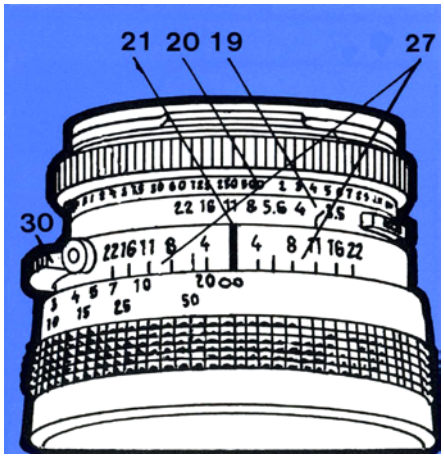

FIGURE 27

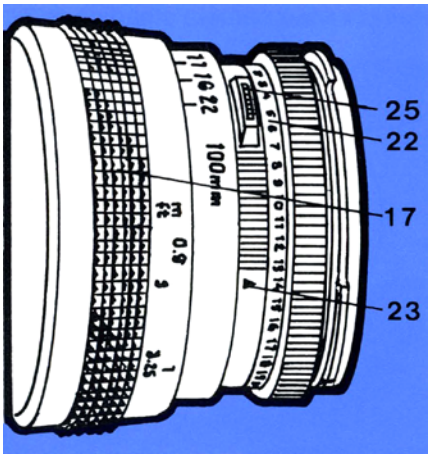

FIGURE 28

The prism viewfinder (13) provides a magnified, upright and laterally correct image. Make certain that you always see the entire square groundglass screen from corner to corner. This requires placing your eye firmly against the rubber eyecup (16) and in the optical center of the eye-piece lens (Fig. 29 & 31).This is especially important when photographing through the windows in the space shuttle. You may not see a window frame cutting into part of the image unless you move your eye around the viewing screen. The rubber eyecup which 0ffers a comfortable support for viewing can be turned for left or right eye viewing. Pressing eye and forehead firmly towards the viewfinder eyepiece also provides an important camera support for increased camera steadiness.

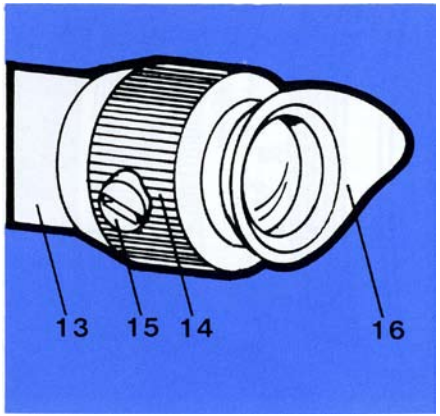

FIGURE 29

NOTE: It is recommended that you remove your eyeglasses. Eyeglasses prevent the close contact between eye and eyepiece. They also allow objectionable light to enter between the eyeglasses and eye. (Fig. 31).

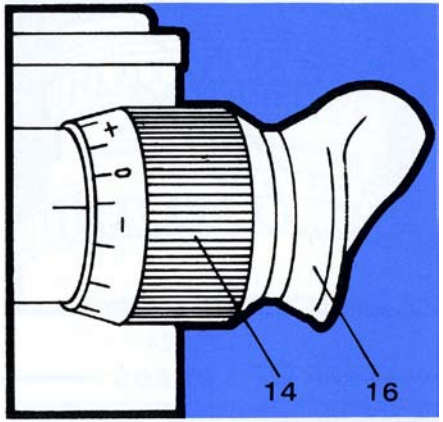

FIGURE 30

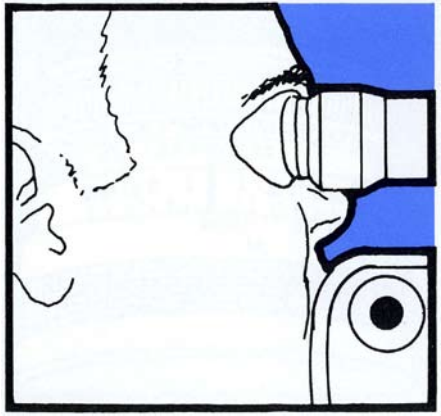

FIGURE 31

Diopter Adjustment

The prism viewfinder is equipped with an adjustable eyepiece (14) (Fig. 29). It may be adjusted to your eyesight for accurate focusing and strain-free viewing. Remove lens from camera. Remove eyeglasses. View through finder and turn diopter adjusting ring (14) until the groundglass screen appears critically sharp. Remove the eye, relax it for a moment by looking at infinity, and view through the finder once more to ascertain that the screen is still sharp. The eyepiece is now adjusted to your eyes. Lock it with screw (15) (Fig. 29).

NOTES:
a) It is suggested that you read the diopter setting after adjusting the eyepiece to your eye-sight (-1 in Fig. 30). This makes it unnecessary to repeat the diopter adjustment after someone else uses the camera simply set it to your pre-determined number (-1 for example) and lock it.
b) If you cannot view without eyeglasses, make the adjustment on the diopter correction eyepiece with the glasses on. c) The viewfinder is not meant to be a handle for carrying the camera.
d) Should the image in the finder appear dark the diaphragm in the lens is probably stopped down. To re-open it, proceed as described under "lens aperture" (Page 22).

The prism finder is also used for focusing the lens (setting the lens for the camera to subject distance). The groundglass screen is split into various sections (Fig. 32):

(A) Groundglass screen area.
(B) Bright microprism area.
(C) Split image rangefinder.

The distance is set by turning the focusing ring on the lens until one or more of the following conditions are achieved:

1) The image (Fig. 33a) appears sharp on the groundglass (Fig. 33b).
2) You see a fine detailed image within the microprism area (Fig. 33b).
3) A straight line crossing the split in the rangefinder (Fig. 34a) appears unbroken (Fig. 34b).

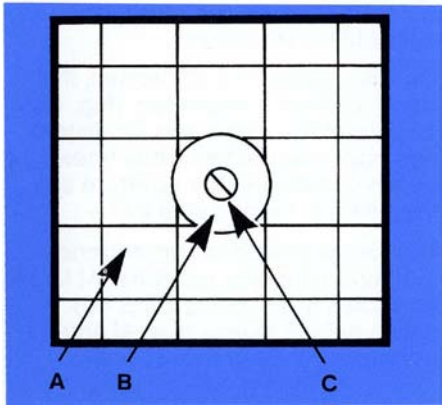

FIGURE 32

NOTES:
a) With the 250mm lens, one of the range finder fields remains dark. Focusing must be done in the microprism or groundglass area.
b) The image always appears sharp in the rangefinder area, so you must have a straight line intersecting the split.

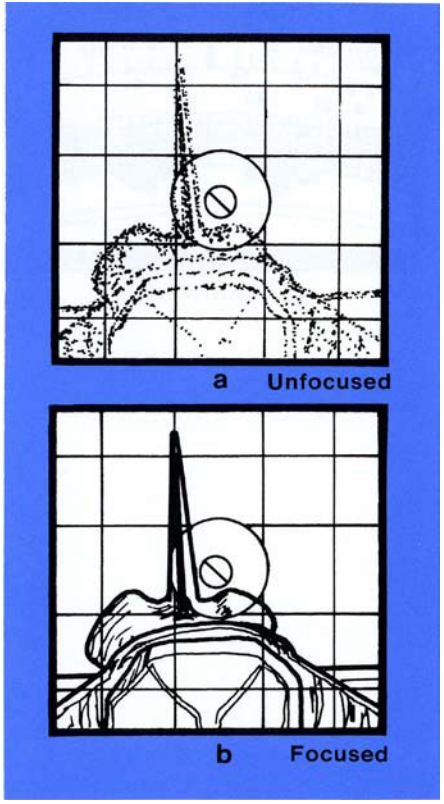

FIGURE 33

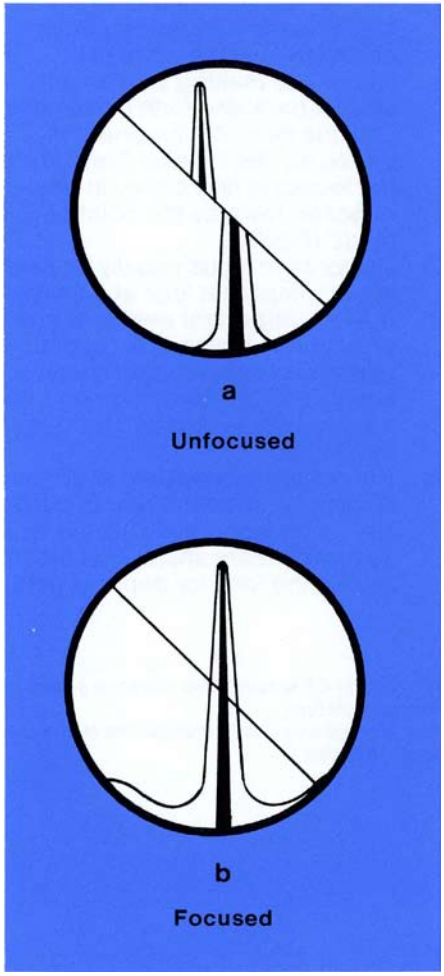

FIGURE 34

1) For fast and accurate focusing, turn the focusing ring quickly back and forth over the point of sharpness making smaller and smaller back and forth movements until the point of sharpness is locked in. This is better than turning the focusing ring slowly in one direction towards the point of focus (Fig. 36).
2) Do not try to focus visually for earth shots, simply set lens at infinity.
3) If all the important elements are at the same distance (not some closer and some further away), simply turn the focusing ring until these subjects appear sharp in the finder.
4) If important subjects are at different distances (in front & rear of cargo bay for instance) try to set the lens so that both are sharp. That means setting the lens for depth of field.

NOTE: The CF lenses have distance scales in feet and meters. The footage scale is in orange, the meter scale in white.

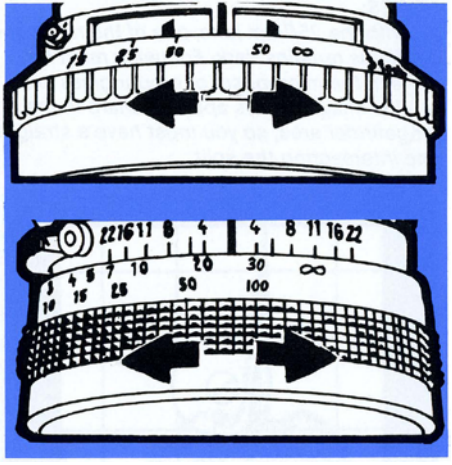

FIGURE 36

Theoretically, on ly subjects that are exactly at the focused distance (Fig. 37) appear sharp on the film. Sharpness gradually falls off in front of and beyond the set distance. On the photographic print or transparency, however, some degree of "unsharpness" is acceptable. This range of acceptable sharpness is called depth of field. One third of the total depth of field is in front of the focused distance and two thirds beyond (Fig. 37).

The depth of field scale on the lens is used to determine the depth of field range.

On Hasselblad C lenses (Fig. 38/39) depth of field is indicated by the two red pointers which move automatically as the aperture ring is turned. The distances opposite the two red pointers indicate the range of acceptable sharpness.

On the Hasselblad CF lenses, the depth of field is engraved (Fig. 40/ 41). Read the close and far distances opposite the two white lines corresponding to the aperture set on lens (11 if lens set at f/11).

The depth of field range depends mainly on the lens aperture. At large apertures (f/5.6 in Fig. 38 &40) depth of field is less than at small apertures, (f/22 in Fig. 39 & 41).

Depth of Field at different apertures

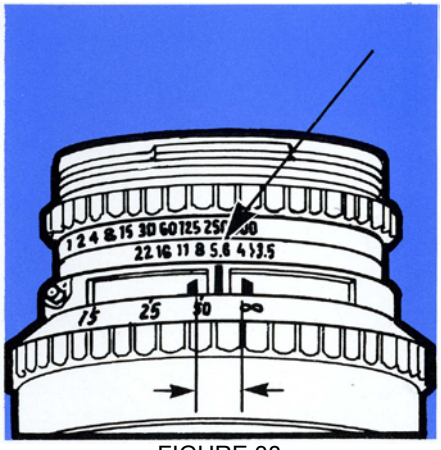

FIGURE 38
Large Aperture gives shallow depth of field

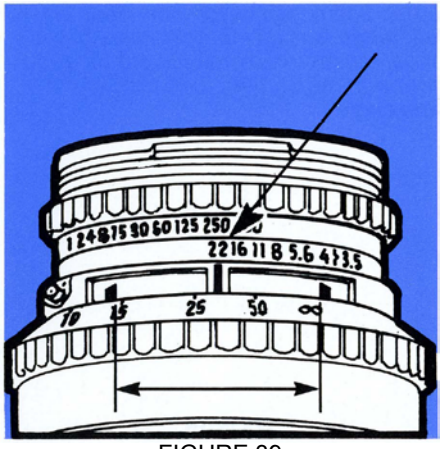

FIGURE 39
Small aperture gives great depth of field

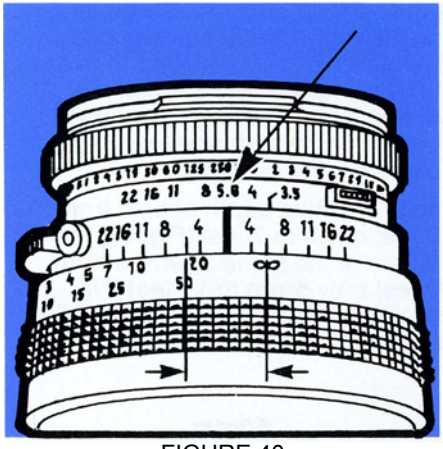

FIGURE 40
Large aperture gives shallow depth of field

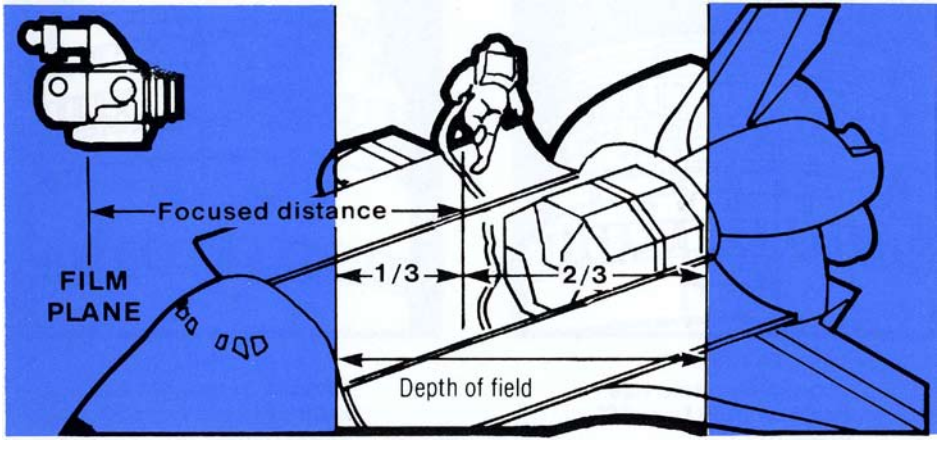

FIGURE 37

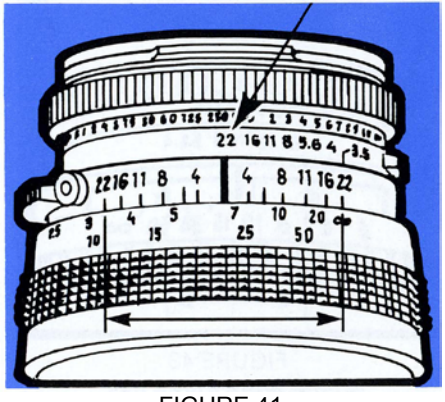

FIGURE 41
Small aperture gives great depth of field

Depth of Field with Different Lenses

Depth of field also varies with lens focal length. The 50mm lens (Fig. 43) has more depth of field than the 100mm (Fig. 44). The 250mm (Fig. 45) has less if the lenses are used from the same distance (each lens covers a different area).

The 50mm has depth of field from 50 feet down to 7 feet (Fig. 43) the 100mm at the same aperture from 50 feet only down to 17 feet (Fig. 44), while the 250mm goes from 50 feet only down to 40 feet (Fig. 45).

NOTE: Sharpness beyond the depth of field range falls off more rapidly with the longer lenses. Backgrounds are blurred more with the 250mm than the 50mm wide angle.

50mm

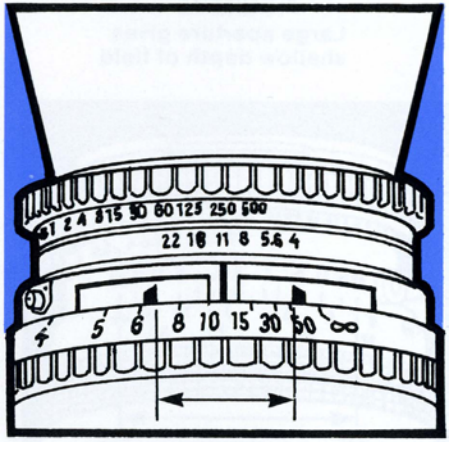

FIGURE 43

50mm Wide Angle has depth of field from 50' down to 7'

100mm

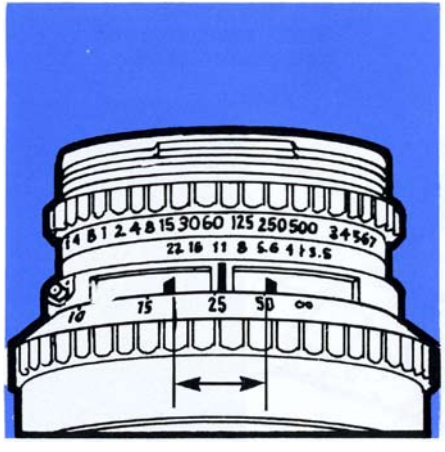

FIGURE 44

100mm standard has depth of field from 50' down to 17'

250mm

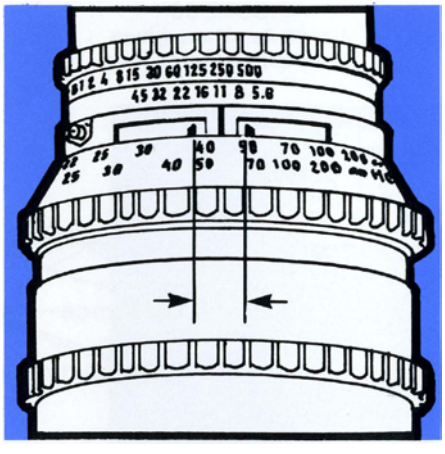

FIGURE 45

250mm Telephoto has depth of field from 50' down to 40'

Focusing for Depth of Field

If subjects at different distances are to be recorded sharply, set the lens for depth of field. Proceed as follows:

1) Focus the lens at the farthest subject to be sharp. Read the distance on the scale (30') (Fig. 46).
2) Focus the lens at the closest subject to be sharp. Read the distance on the focusing scale (8') (Fig. 47).
3) Set the lens, so the two distances are within the depth of field indicators (Fig. 48).

NOTE: If the two distances cannot be placed within the depth of field range (because of exposure requirements), decide whether it is more important to have the background or the foreground sharp, and set the lens accordingly.

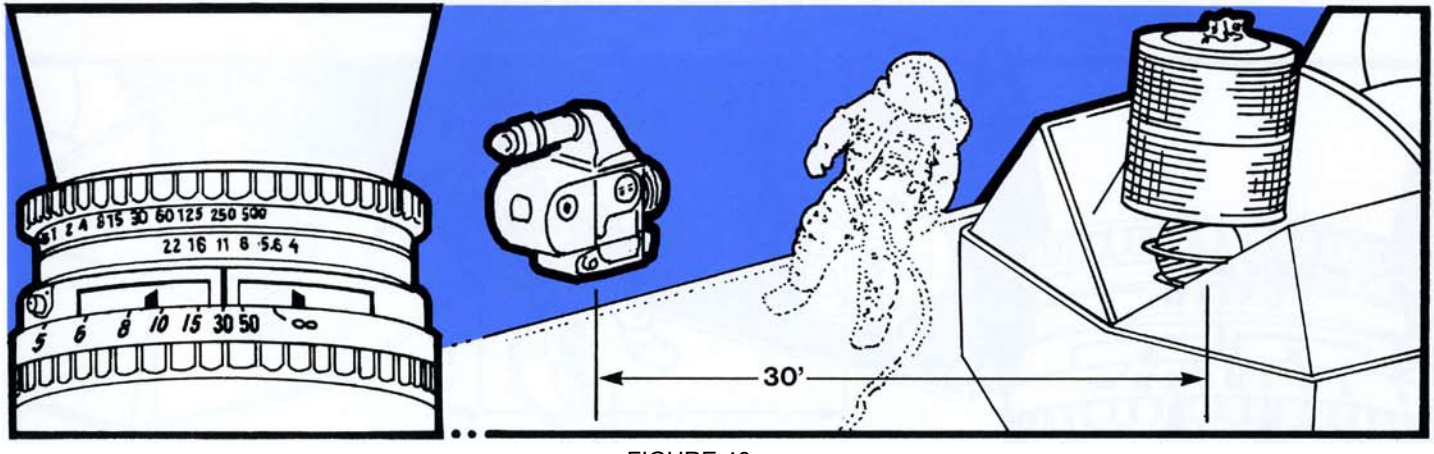

FIGURE 46

30' is the farthest subject distance

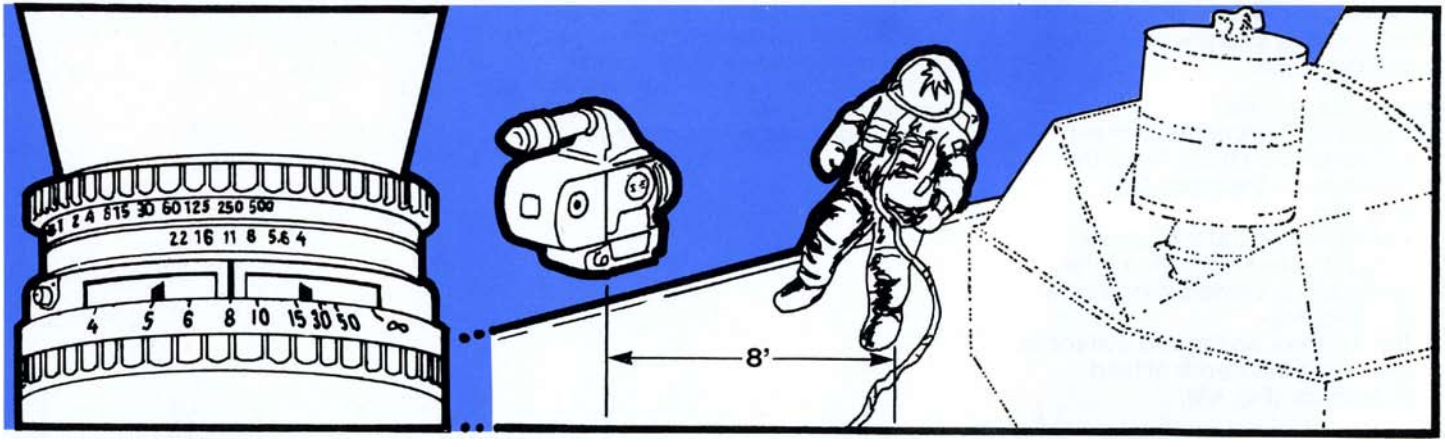

FIGURE 47 **8' is the closest subject distance**

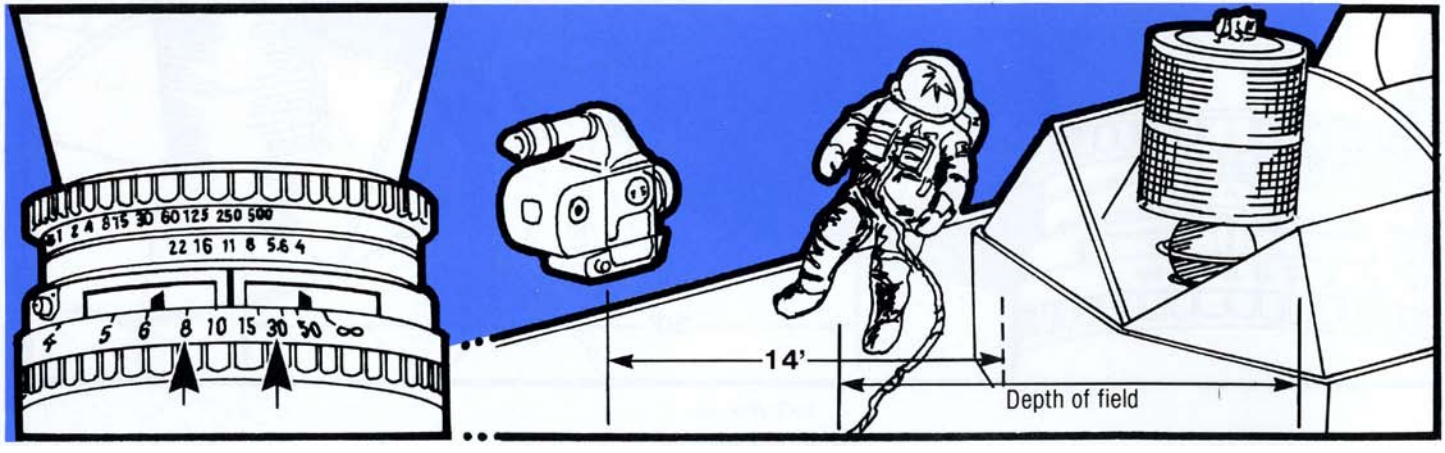

FIGURE 48 **14' is the distance set on lens**

Three different focal length lenses are used on Hasselblad. The focal length engraved on the lens determines the angle of view and thus the size of the area included in the picture.

1) The 100mm Planar has a diagonal angle of view of 43°. It is called a standard lens as it records an image on the film that looks in a "natural" perspective. Subjects at different distances from the camera appear as we see them with our eyes.
2) The 50mm's wide angle of view (measured diagonally) is 75°. It covers a larger area from the same distance and includes large background areas (e.g. a large part of the earth). Subjects are recorded smaller compared to the standard lens. Background appears farther away. It enhances the size relationship of subjects close and far.
3) The 250mm telephoto has a narrower angle of view of 18°. It covers a smaller area, and magnifies the subject, (2% times compared to the 100mm lens). It includes small background areas (e.g. small part of earth) and compresses perspective. Distant subjects appear closer.

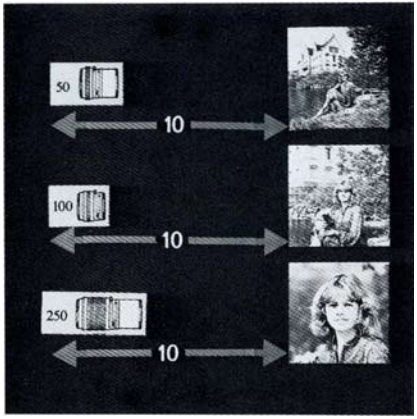

The 50 mm wide angle (top) covers a larger area, and the 250 mm telephoto (bottom) a smaller area than the 100mm "standard" when used from the same distance. With the wide angle, distant subjects are smaller and thus appear further away. The telephoto magnifies subjects and brings them closer.

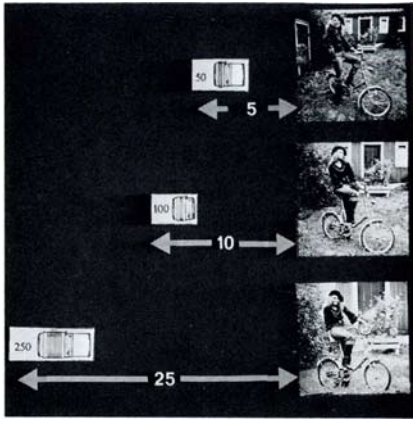

Different focal length lenses can also be used to cover the same area by photographing from different distances. While the subject size is the same, the perspective is not.

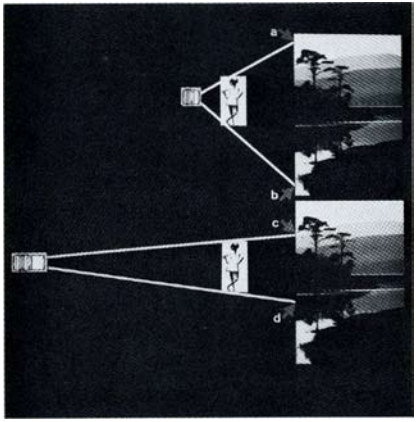

A short focal length lens (top) covers a large background area (from a to b). A longer focal length lens used from a longer distance (bottom) covers a smaller background area (from c to d) while the main subject (the model) is the same size in both.

1

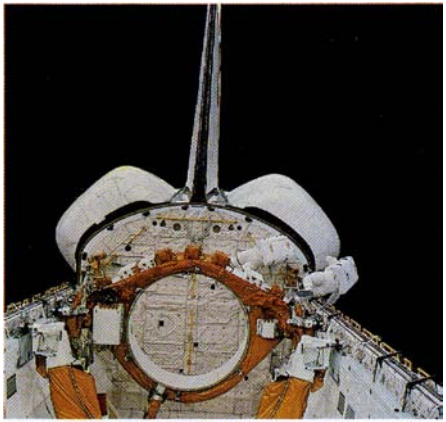

2

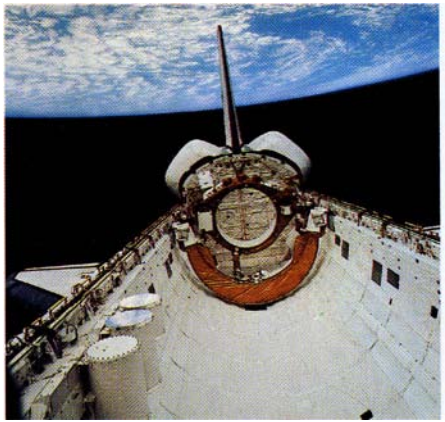

3

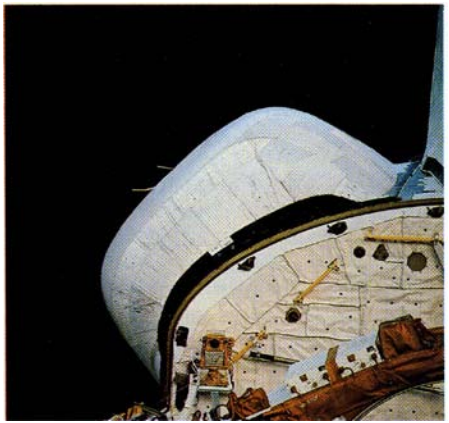

The cargo bay area photographed with different focal length lenses. The 100mm (1) records the area as normally seen, the 50mm wide angle (2) makes it appear longer and the 250mm telephoto (3) magnifies the distant details.

1

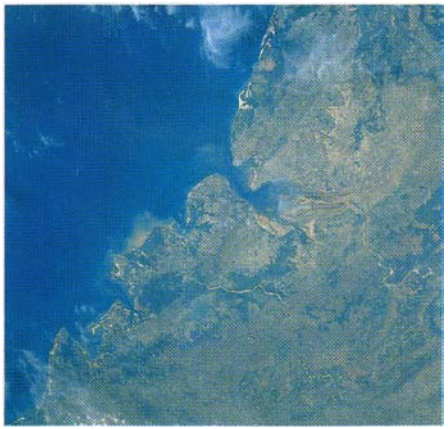

2

The use of different focal length lenses to photograph the earth - 100mm (1), 250mm telephoto (2).

1

The 50mmm wide angle used in (1) made the church appear to be far away from the sign. With the telephoto (2), used from a longer distance, the sign is recorded of equal size but the church appears much closer. This size relationship between fore and background is known as perspective and is determined by the camera/subject distance. The wide angle lens (1) also includes a much larger background area than the telephoto.

2

3

A small lens aperture (f/22) with its large depth of field produces an image as we see it with our eyes (3). The shallow depth of field at a large aperture (f/4) produces an image that is pictorially more striking, and can be used to blur foreground and background to enhance a particular subject (4).

4

The lens aperture indicates the diameter of the diaphragm opening. It changes by turning the aperture ring. In addition to depth of field it also controls the amount of light that reaches the film.

At a high f number, (22, for instance) the diaphragm opening is small, and lets in less light (Fig. 49). At a small f number, (4, for instance) the diaphragm opening is larger, and lets in more light (Fig. 50).

NOTE: The lens aperture is normally fully open to provide the brightest image for viewing. In case the groundglass image appears darker than normal, the aperture may have stopped down accidentally. If so, re-open it by doing the following: For "C" lenses. Turn the aperture ring until the maximum aperture (smallest f#) is opposite the white index. This may require uncoupling aperture & shutter speed ring by depressing lever (24) towards camera body, (Fig. 51), and turning aperture ring (19) alone to max. aperture, (smallest number). Re-set the ring to the correct aperture and shutter speed combination. For "CF" lenses. Depress the bottom of the stop down lever (30) and push the entire lever upwards (Fig. 52).

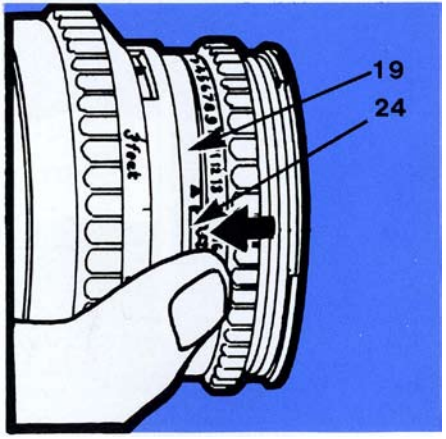

FIGURE 51

High f number is small aperture

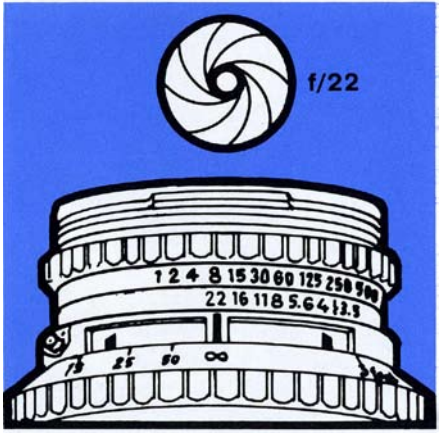

FIGURE 49

Low f number is large aperture

FIGURE 50

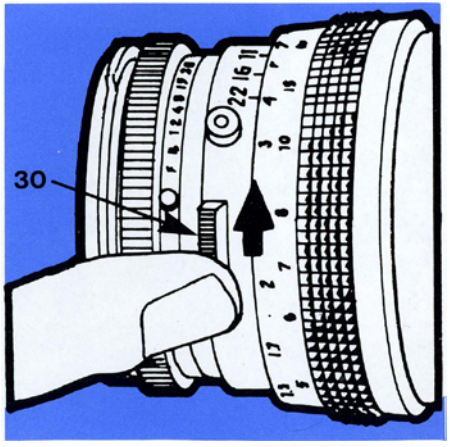

FIGURE 52

Shutter Speed

There is also a shutter in each lens. It opens and closes when the release is depressed. The length of time the shutter stays open is set on the shutter speed ring engraved from 1 to 500 meaning 1 second to 1/500 second.

The longer the shutter speed, the longer the film is exposed to light. Changing the shutter speed from 1/125 to 1/250 sec. makes the image darker - changing from 1/125 to 1/60 makes it one stop lighter. Whenever possible, select short shutter speeds when using the camera handheld. Leave the shutter speed at 1/250 sec. Change to a slower speed only when low light levels require it, and if so, do not go below 1/60 sec. and then only with the 50 and 100mm lenses. Never use a speed slower than 1/250 sec. with the 250mm Sonnar.

NOTE: In case shutter speed ring on CF lenses has accidentally moved to the green F setting, depress green lock button (18) and re-set ring to correct shutter speed,

Setting Aperture & Shutter Speed

On some "C" lenses and on all "CF" lenses, aperture and shutter speed rings are not coupled. Each can be turned independently. The two rings on the "CF" lenses can also be coupled by depressing interlocking button (25) (Fig. 53).

On some lenses, aperture and shutter speed rings are coupled. They both change together while turning knurled front ring (20). As you change the aperture (e.g. from f/4 to f/8) the shutter speed changes (from 1/250 to 1/60).

You can set the aperture separately by pressing the cross coupling lever (24) to the rear and turning the aperture ring (19) (Fig. 51). With the cross coupling lever pushed towards the rear, you can also change the shutter speed separately by turning the shutter speed ring (20) with the other hand.

Coupling aperture and shutter speed ring offers the advantage that all the interlocked settings provide exactly the same exposure. (See page 24).

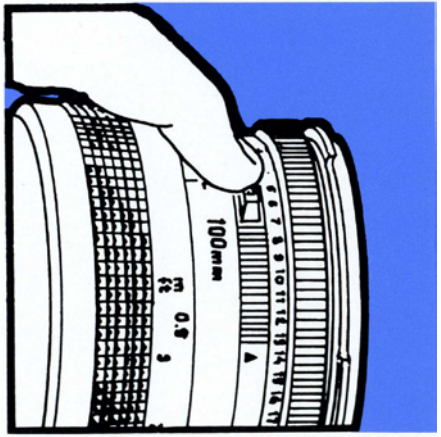

FIGURE 53

Exposure

The film in the camera must receive a specific amount of light to produce a properly exposed image. The total amount of light that reaches the film is determined by the combination of aperture size and shutter speed. The same exposure can be obtained with a longer shutter speed and small aperture or a short shutter speed and large aperture. Changing from a low f number to the next (f/8 to f/11) means letting in only half the amount of light. You can compensate for this loss of light by letting the light go through the lens twice as long, i.e. setting the shutter speed at 1/125 instead of 1/250.

Changing Aperture & Shutter Speed

With the aperture and shutter speed rings interlocked, all combinations give the same exposure. To say it in a different way, if you change the aperture or shutter speed on the interlocked rings the shutter speed or aperture size automatically compensates. To increase or decrease the light going through the lens, you must unlock the coupling and change either the aperture only or the shutter speed only, or both.

The necessary lens settings for correct exposure can be obtained from charts, from previous experience or from an exposure meter.

Exposure from charts

A general exposure setting can be used to photograph any part of the earth but only when the sun is at or near maximum sun angle i.e. approximately 10 a.m. to 3 p.m.

When the sun is at an angle of less than 30°, lens aperture must be opened one or two f stops to avoid underexposure. Consult the sun angle exposure chart supplied for your mission.

In summary, for earth shots, determine the sun angle, then consult the sun angle chart and set each lens accordingly. Never use the spotmeter for determining the lens settings for earth shots.

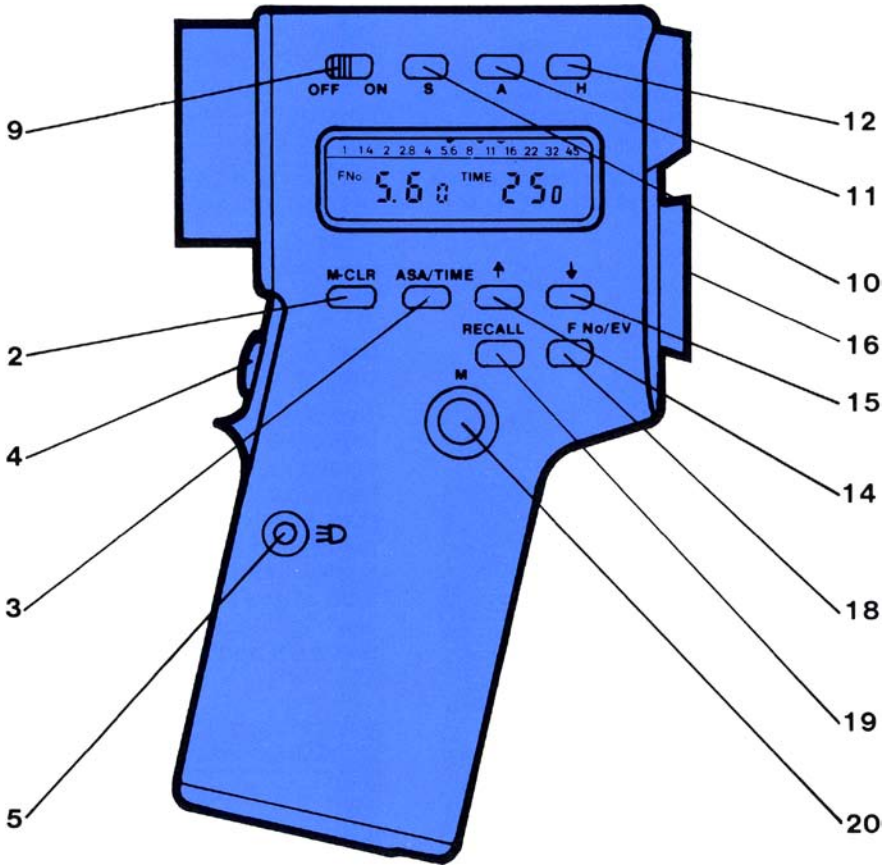

FIGURE 55

2 MEMORY CLEAR
3 ASA/TIME SELECT
4 TRIGGER
5 VIEWFINDER DISPLAY ILLUMINATION BUTTON
9 OFF/ON SWITCH
10 SHADOW BUTTON
11 AVERAGING BUTTON
12 HIGHLIGHT BUTTON
14 ASA/TIME INCREASE BUTTON
15 ASA/TIME DECREASE BUTTON
16 VIEWFINDER EYEPIECE
18 EV/ F NO. SELECT BUTTON
19 RECALL (MEMORY)
20 MEMORY

NOTE: The meter is battery powered.
There are no spares on-board.
Indication of bad batteries is a flashing meter display.

ASA/Shutter Speed Setting

Before you use the exposure meter ascertain that it is set for the ASA rating of the film in the camera and the shutter speed set on the lens. The ASA rating is indicated on the Hasselblad film magazine.

Turn meter on by sliding the on-off switch to ON. Check the ASA setting by depressing the ASA/Time select key (3). Read ASA. If number is too low, depress ASA/Time increase key 1 (114) repeatedly until the right value appears. If too high, depress the ASA/Time decrease key ↓ (15) repeatedly until the ASA value is correct.

Check the shutter speed setting by depressing the ASA/Time key (3). If the shutter speed is lower than the camera depress the increase key 1 (14) repeatedly until the shutter speed corresponds (120 for 1/125 sec.) If too high, depress the decrease key! (15) repeatedly until the value corresponds.

NOTES: The display should not show a small S or M (this would indicate seconds or minutes rather than fractions of a second.) The ASA and shutter speed display can only show 0 in the third and fourth digit Thus 64ASA will appear as 64; a 1/ 125 shutter speed as 120.

Viewfinder

Adjust the viewfinder to your eyesight by turning the eyepiece guard (16) until the 10 circle engraving appears sharp.

NOTES: Meter readings should always be made with the eye covering the eyepiece to prevent light entering the ocular and affecting the meter reading.
Exposure reading is not affected by the eyepiece adjustment Never point meter directly at the sun.

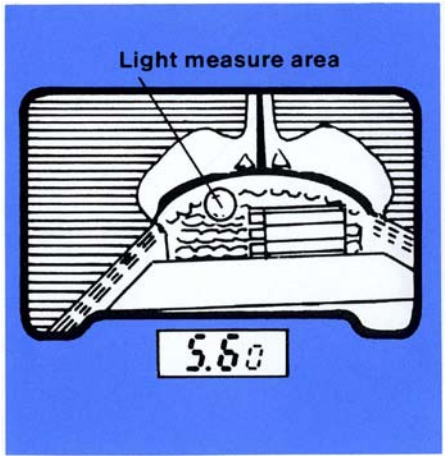

FIGURE 56

Operating Meter

To take a meter reading, place the 10 circle over the area you want to measure (Fig.56). Press and hold the release trigger (4) until a reading appears in the finder LCD display. After the display stops changing release the measure button to hold the reading. Set aperture on lens according to reading in display window (Fig. 57).

The meter reading (the f number) can be read in either of three places: 1) digital display on side, 2) indicator above side digital display, and 3) digital display in viewfinder.

The digital display of f/stop indicates "Tenth's of a stop" as a small or subscript number. This can be rounded off to the nearest 1/2 stop. For example a small 0 behind number 5.6 (Fig. 57) indicates exactly f/5.6. The f#8.03 (Fig. 58) means 3/10 of an f stop smaller than f/8, (less light than f/8). Set aperture between f/8 and f/11.

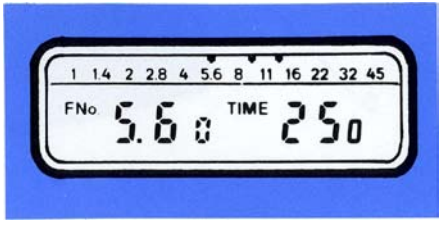

FIGURE 57

Determining Lens Settings with Exposure Meter

If an "E" (error) appears in the number display, it means the range of the meter has been exceeded. Some parameter needs to be changed shutter speed and/ or film type.

Meter remains active for 2 minutes after it is turned off.

NOTES: Meter readings can be taken only while in the TIME mode not ASA mode. F No/ EV key should not have to be actuated. The meter is launched in F No mode.
Do not depress shadow (10) or highlight (12) buttons.

A basic understanding of light measuring will help you to use the exposure meter properly.

The lens settings that provide correct exposure are based on the amount of light falling on the subject you photograph, not reflected off the subject. The lens settings must be the same whether you photograph a subject that is white, gray, black, yellow, red, green or blue or whatever the color might be as long as the same amount of light (X in Fig. 59) falls on them. Your meter, however, does not measure the light that falls on the subject, but the light reflected off the subject. Its reading is based on the amount of light reflected off the very small area inside the circle in the meter finder. The meter reading is different if you point the meter at a white, gray, black, green, blue, or red area even though the same amount of light falls on all (Fig. 60). Point the center circle of the meter at gray or green, it might show f/11 at white or yellow f/22 and at black or dark brown f/5.6. Which is correct?

The readings shown on your meter are correct only when the center circle is pointed at a subject or area that reflects approximately 18% of the light. It is incorrect when the reading is taken off an area that

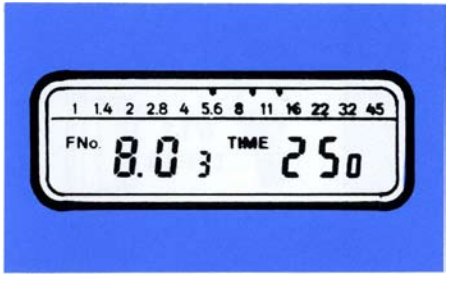

FIGURE 58

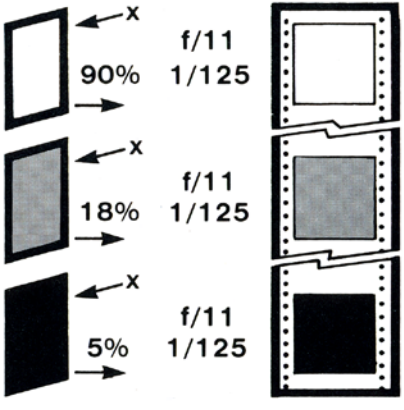

FIGURE 59

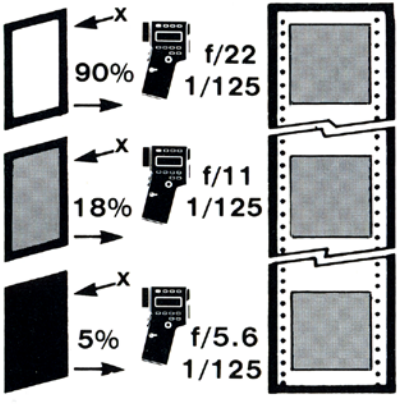

FIGURE 60

reflects more or less. If you set the lens for the white reading (f/22 1/125), white would be recorded as gray, not white. The image is underexposed. A lens set for the black reading (f/5.6 1/125) would record black also as gray, not black. The image is overexposed. This problem can be overcome in various ways:

A) Whenever possible, point the center circle at an area that reflects approximately 18% of the light - green, light brown, gray - and use the indicated setting.

B) Point the center circle at whatever area is most important then try to estimate whether the area in the circle reflects more or less than 18% and if so adjust the lens setting. When reading a bright (white) area open aperture one to two f stops (Fig. 62a). When reading a dark area, close aperture one to two f stops (Fig. 62b).

For shuttle space photography, the following corrections should be used. These corrections will produce slightly underexposed transparencies which are desired for duplication.

For white only scenes:	Open 1 stop (f/11 instead of f/16)
Reading off white cargo bay:	Open 1 stop
Reading off white space suits:	Open 1 stop
Reading off blue space suits:	Close ½ stop
Reading off suntanned fleshtones:	Correct
Reading off black fleshtones:	Close 1 stop
Reading off black only scenes	Close 1 stop (f/11 instead of f/8)

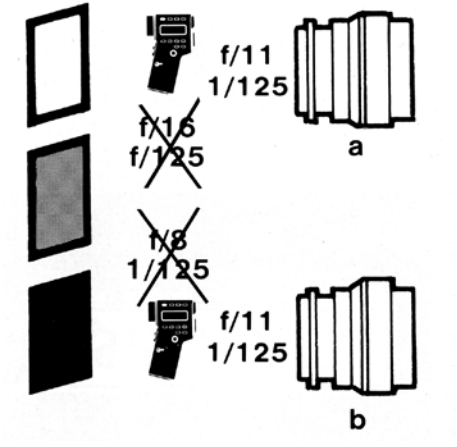

FIGURE 62

Exposing for Sun or Shade?

Frequently some areas included in a photograph are in sunlight, some in the shade. Pointing the meter into the sunny area (of the cargo bay for instance) gives a higher reading than from the shaded area (Fig. 63). Which exposure is correct? This depends on the type of film in the camera.

Exposing for Negative Film

Negatives need shadow details. Lens settings, therefore, must be based on the amount of light falling in the shaded area: the shaded side of the cabin, astronauts face or suit, or the shaded side of the cargo bay (Fig. 63b). Point the meter at the shade. Open the lens one f stop if the shaded subject is white.

Exposing for Slides

Slides look best when exposed for the lighted areas even though there may be little detail in the shade. It prevents washed out highlights without color and contrast. With slide film (Ektachrome) therefore, point the meter at a subject in the lighted area, (The sunny side of the cargo bay, (Fig. 63a) the sunlit area inside the cabin, the sunlit side of the astronauts face or space suit, the sunlit side of a satellite). A correction needs to be applied to the spotmeter reading if the subject is not 18% grey. For bright white subjects, open the lens one f stop (lower number) from spotmeter reading. Exception: If it is more important for record purposes to see details in the shade rather than producing a pictorially good looking slide, you should expose for the shade. This, for instance, could be the case when you need to record the launching of a satellite or the work of the astronauts in the shade of the cargo bay. If so, try to compose the image in such a way that the sunlit areas are not very large and not in the center where they are distracting. Bright areas attract attention!

High Contrast Scenes

Slides exposed for the lighted area, as explained, usually look best. In a high contrast scene where it is desirable to see details in the lighted and dark areas, take a meter reading of both and set the aperture in between the two.

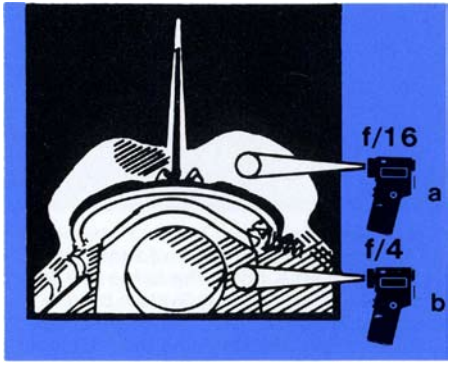

FIGURE 63

Bracketing Exposure

Following these suggestions, exposure should be extremely accurate - no need for bracketing which means taking the, same image at different lens settings. In doubtful cases, or when the contrast between light and dark is very high, bracketing is recommended when time permits. Take the picture at the meter setting, then take additional pictures at one f stop higher and one f stop lower.

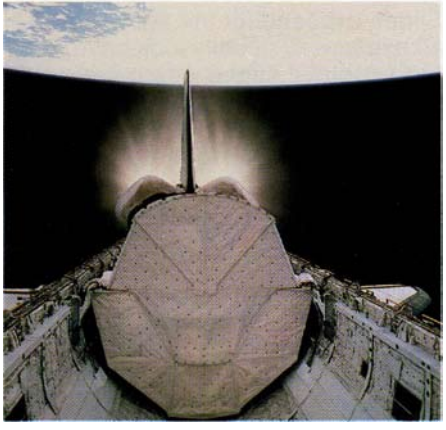

It is impossible to have "perfect" exposure for the shaded cargo bay and sunlit earth at the same time. Since the cargo bay with the Orbital Maneuvering System burn is the more important part, the above image is properly exposed to make the best looking transparency.

Slides look best when exposed for the lighted areas. The spot meter should therefore be pointed at a lighted area (P [positive film]). Negative films need shadow details. The spot meter is therefore pointed at a shaded area (N).

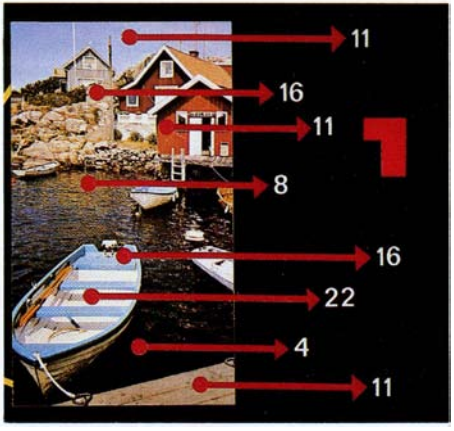

The spotmeter reading can vary within several f stops depending whether it is pointed at dark or light colored subjects. It is correct when pointed at subjects that reflect about 18% of the light such as the brown building, the blue sky, and the gray board in the foreground which all show f/11.

The effectiveness of an image is greatly determined by the arrangement of lines, shapes, and colors within the square area. This is known as composition. Evaluate the arrangement of these elements on the screen and try to frame the scene so it looks like a pleasing, balanced image that keeps the viewers eye within the frame.

1) Single subject.
   If the scene is dominated by one single subject (a satellite being launched), place the subject in the center of the frame. It is a static image but all attention is then automatically focused on this subject (Fig. 64).
2) Balance.
   An important subject, dominant line, shape on one side of the image, or on top or bottom must be balanced by a second, somewhat less dominant element on the other side (Fig. 65). Do not have all the elements that attract the eye on one side. The image "falls over." (Fig. 66).
3) Color balance.
   Colors must also be considered for balance. Try to balance a subject of a specific color on one side by a second subject of the same or similar color on the other side.

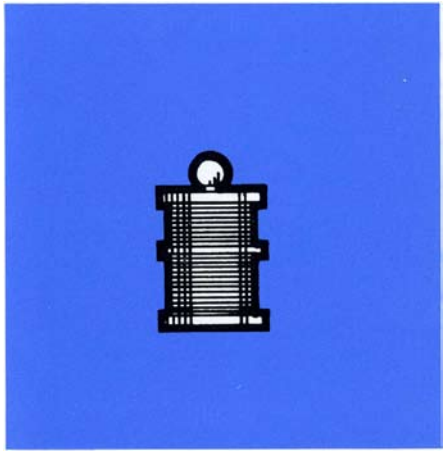

FIGURE 64

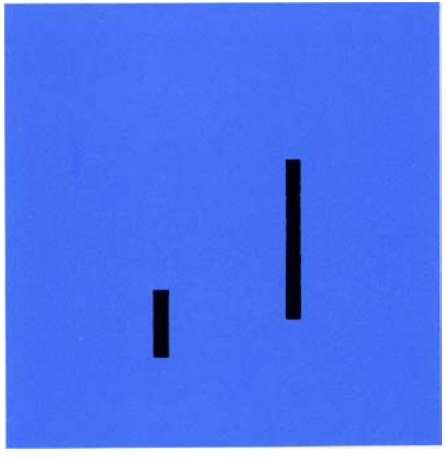

FIGURE 65

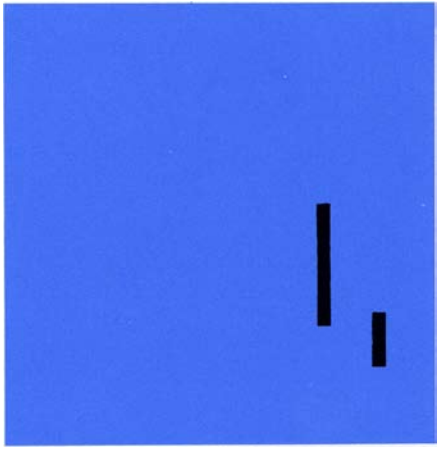

FIGURE 66

4) Rule of thirds.
   In scenes including more than one important element, place the most important line, shape and color approximately ⅓ from the left, right, top or bottom (Fig. 67).
5) Placement of horizon.
   The horizon, the outline of the earth is frequently a dominant line. Avoid placing it through the center splitting the image into two equal halves (Fig. 68). Place the line 1/3 from top or bottom (Fig. 69).
6) Diagonals.
   Horizontals are static, diagonals are dynamic. Framing the outline of the earth, features on the earth, or parts of the space shuttle as diagonals makes a more striking image (Figs. 70, 71).
7) The leading line.
   A slanted line starting at the bottom of the frame can be used to lead the eye towards the main subject (Fig. 72).
8) Attention creating elements.
   In any image the eye is attracted by:

   a) The brightest area, regardless how small.
   b) The “one of a kind thing” - a color or shape that is different from all the rest, a line going in a different direction than the rest (Fig. 73).
   c) A dark line or shape next to white.
   d) A line broken by the frame of the image (Fig. 74).

Use these elements to attract attention. Avoid them if they are unimportant.

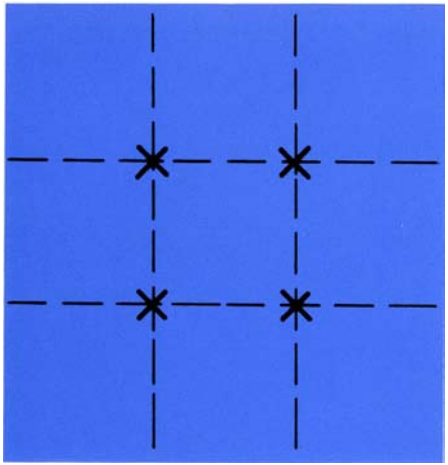

FIGURE 67

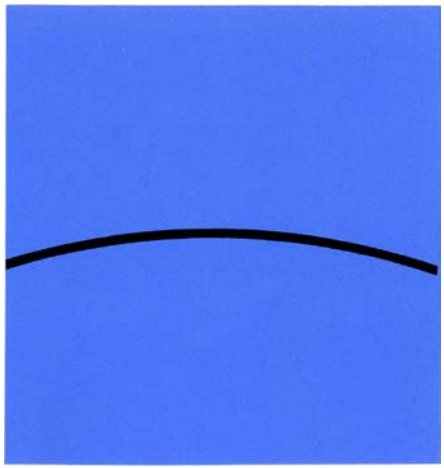

FIGURE 68

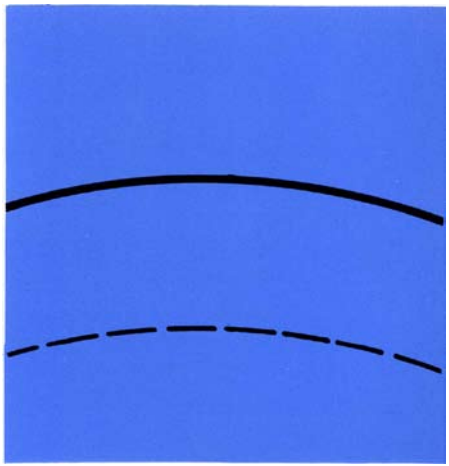

FIGURE 69

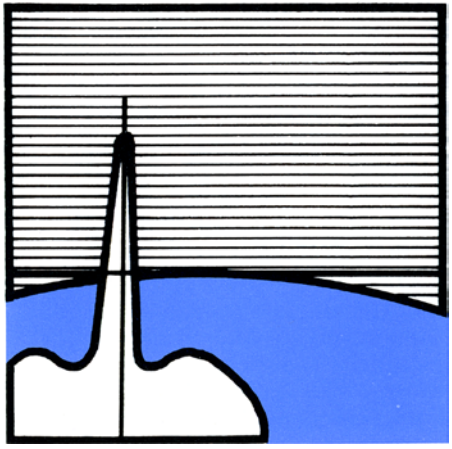

FIGURE 70

FIGURE 71

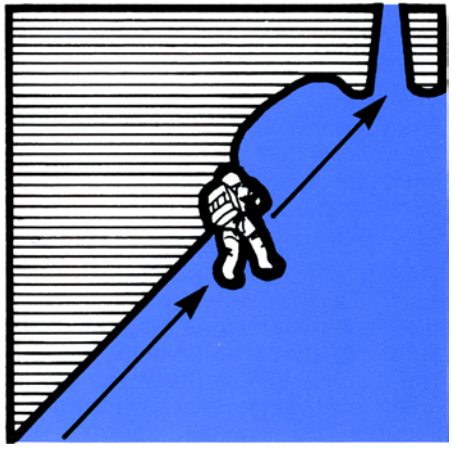

FIGURE 72

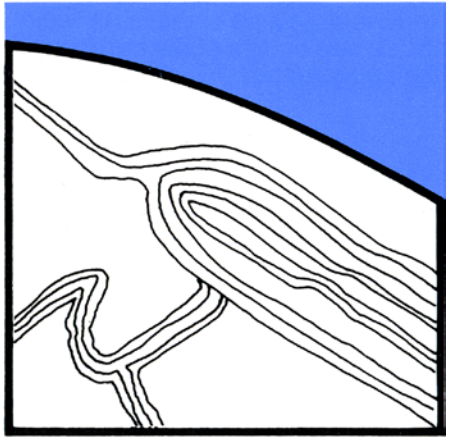

FIGURE 73

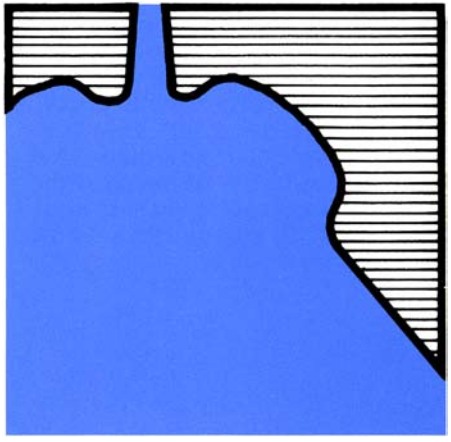

FIGURE 74

The effectiveness of the image depends on sharpness, correct exposure, good composition and lighting.

Frontlighting: The sun illuminating the subject from the front, is the least effective. Everything is evenly lit, flat without shadows and highlights.

Sidelight: From a photographic point of view, sidelight produces more effective images. Some areas are in the shade, some in the light. The result is a three dimensional effect which enhances details and textures. The increased contrast also makes the images appear sharper.

Areas on earth are lit by sidelight only in early morning or late in the afternoon. It produces, photographically, the most effective and sharpest looking images. This is true especially of areas that are of equal color, e.g. flatland, deserts. Lens settings must be adjusted for low angle sunlight. See exposure. Clouds photographed in sidelight take on a fluffy shape, and are not just patches of white.

Backlight: The sun shining towards the camera, can be even more effective - but mainly for effect, not documentation. Sun light reflecting on water surfaces can be very striking. The contrast is usually too high to see details in the shaded and lighted areas. You must expose for one or the other depending on the film. See exposure page 29. Unless details are necessary in the shaded area, expose slide film for the sunlit background, such as sky or earth.

Camera Angle: Best quality with most details in earth shots is usually obtained by photographing straight down, not at an oblique angle. Oblique angle shots are more likely to look flat and hazy, but this can be pictorially effective because they show a large area of the earth with the curved outline of the horizon in the background.

Sun Protection: Direct sunlight should never shine directly on the lens. It produces flare - a loss of contrast. Hold the camera so the lens is shaded from direct sunlight. If not possible, place your hand over the lens to form a sunshade, naturally making certain the hand does not show up in the picture. Check the image on the groundglass screen.

The sun shining on a shuttle window also produces a hazy picture. Try to shoot through a window that is shaded from direct light. Always try to shoot as straight as possible through the window, not at an angle. The top cabin window is usually the cleanest and therefore produces the best results.

The sharpness and contrast of the image is decreased immensely when recorded through dirty, greasy glass. Clean the windows in the shuttle before you photograph through them. Clean the lens surfaces with the lens cleaning kit. Don't just clean the front element, but the rear element as well, especially when changing lenses. Clean front and rear surfaces before you attach the new lens.

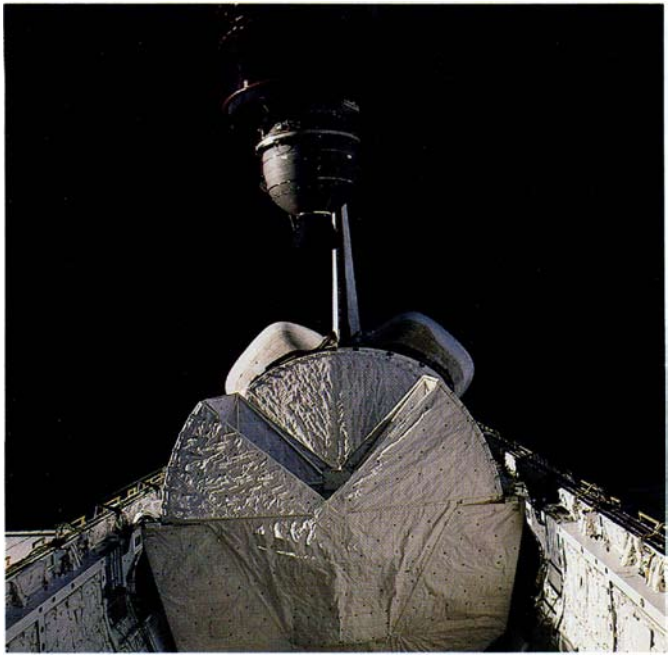

Properly exposed to render the clouds as white as they should be, this photograph silhouettes the shuttle and space walker for a dramatic visual effect. The reflections of the clouds on the lower left help the composition by "balancing" the white from the top. Good use of a leading line - the right side of the cargo bay leads the eye to the space walking astronaut.

The beautiful quality of a strong sidelight is illustrated in this shot of a Satellite Business System deployment. It brings out the patterns, the details in the cargo bay and the SBS. Since the SBS is the one and only important subject, it is properly composed in the center of the frame.

The effectiveness, sharpness and three dimensional feeling that a low sun angle creates is beautifully illustrated in this view of the Kamchatka peninsula in the U.S.S.R. The diagonal shore line adds to the effectiveness from a compositional point of view.

A low sun angle helps especially when photographing deserts or other land areas where the entire landscape is of the same or similar color.

Sunlight reflected on water surfaces can produce a most striking image.

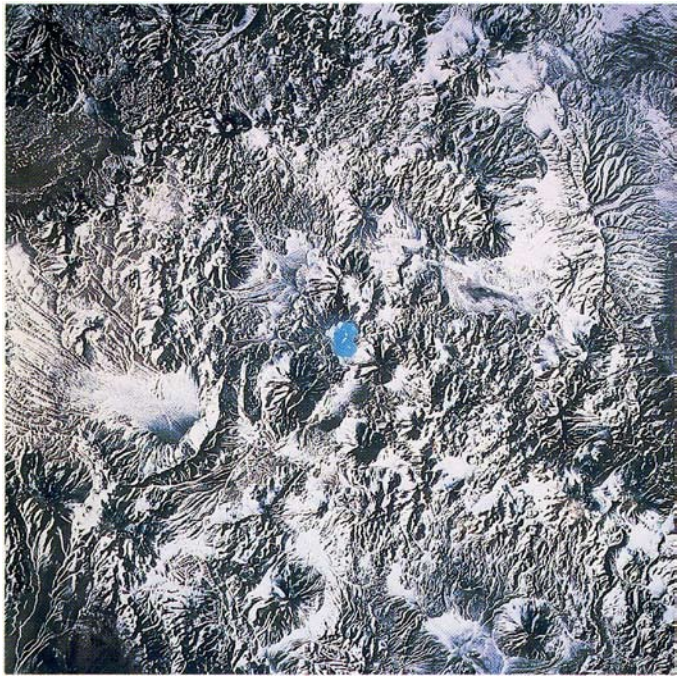

The blue area attracts immediate attention because it is the only blue in the picture. It is properly composed in the center.

A striking example of the beautiful and dramatic light quality created by a low sun angle.

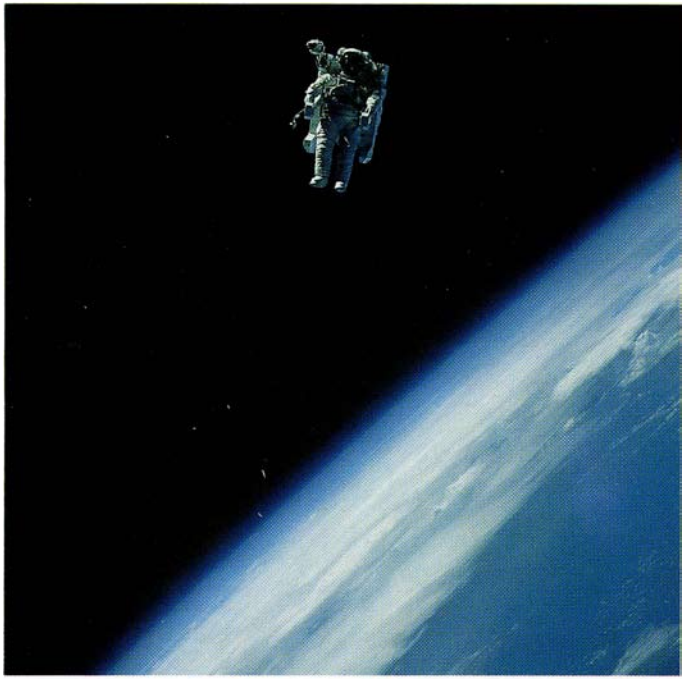

The future possibilities in space are beautifully documented in this Hasselblad photograph of an untethered space walker.

The diagonal earth line creates a more dynamic image.

© 1984 Victor Hasselblad Inc./NASA

Published and Printed in USA.

NASA

HASSELBLAD